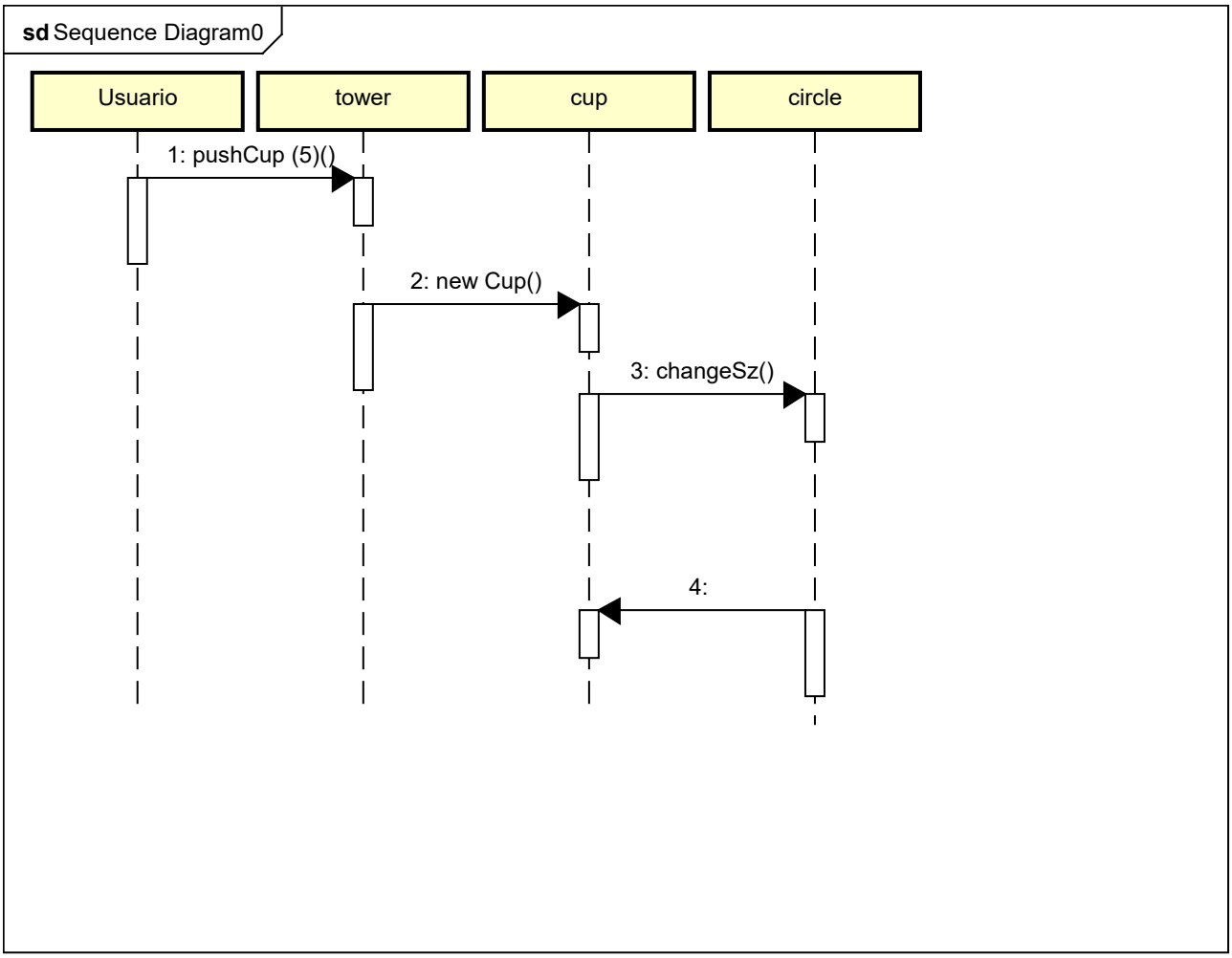
sd Sequence Diagram0
Usuario
tower
cup
circle
1: pushCup (5)()
2: new Cup()
3: changeSz()
4: